0 603 296 003 / 061
Stand } ~~01-02~~
Issue } 02-08-01

Fig./Abb. 1

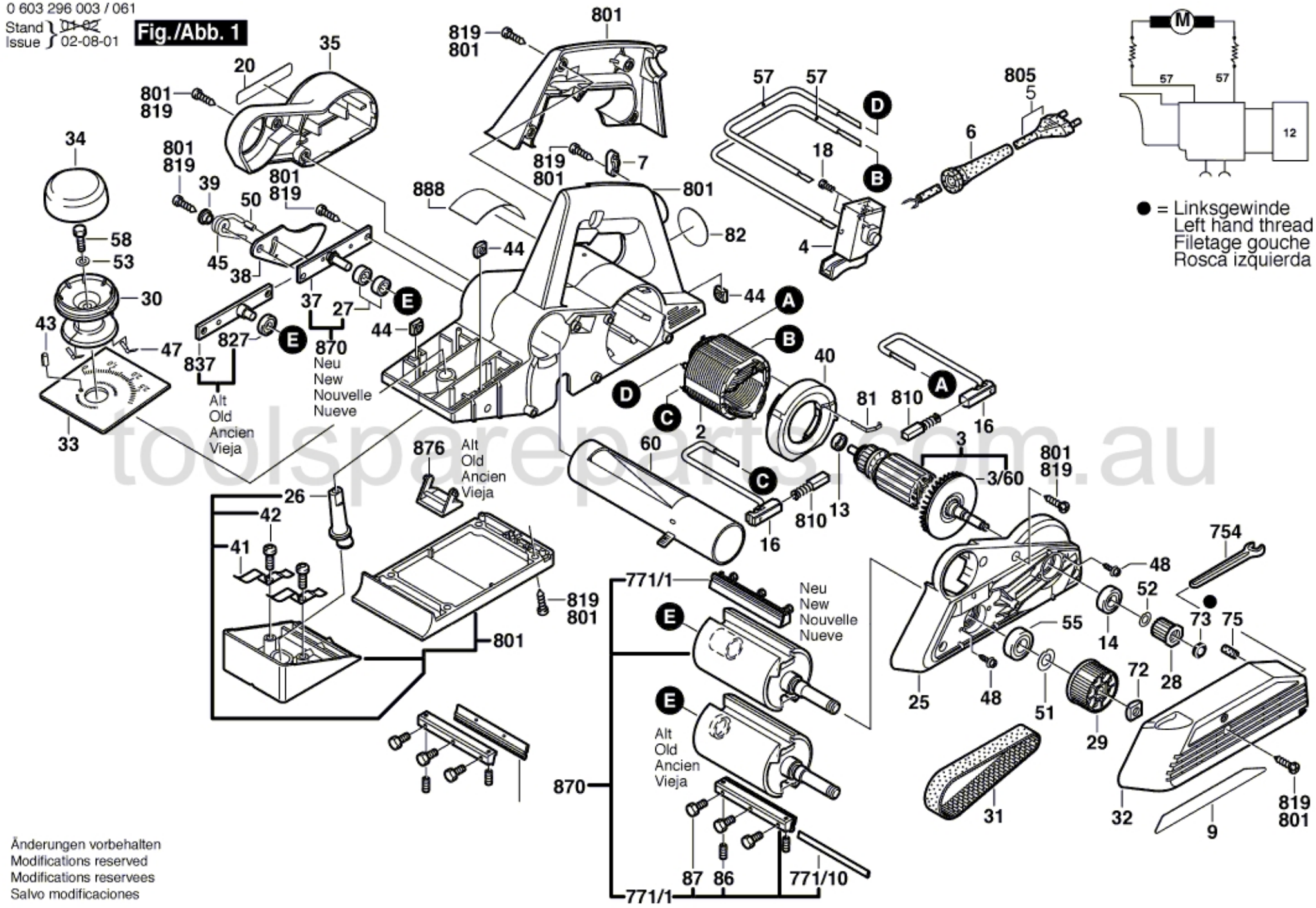

toolspareparts.com.au

Änderungen vorbehalten
Modifications reserved
Modifications reservees
Salvo modificaciones